产品规格书

PRODUCT SPECIFICATION

客户名称Buyer Name	
客户料号Buyer Part No.	
客户承认签章 Buyers Approval & Signatures	

文件编号Spec No.		版本	A/0
品名描述 Product Description	线性振动马达 LINEAR VIBRATION MOTOR		
型号Part No.	VLV041235L-FP192		
送样日期Date			
设计Designed by	审核Checked by	批准Approved by	
2022.12.12	2022.12.12	2022.12.12	

www.vybronics.com
sales@vybronics.com

- 目录/List -

封面/Cover 1/12

目录/Contents 2/12

更改记录/Revision History 3/12

1.适用范围/Scope of Application 4/12

2.使用条件/Standard operating condition 4/12

3.测试条件/Testing condition 5/12

4.特 性/Characteristics 5/12-6/12

5.可靠性试验/Reliability Test 7/12
判定标准/ Judging standard 8/12

6.使用注意事项/Caution 9/12

7.环保要求/Environmental protection Requirements 10/12

8.马达外形图/Vibration Outside View 11/12

9.包装/Packaging 12/12

更改记录/Revision History

Rev. No.	Rev. Date	Page No.	Revised Item	Reason
A/0	2022.12.12	/	Release for Production	

1.适用范围/Scope Of Application

本规格书适用于移动电话的振动马达。
This datasheet is applied for vibration motor, which is for mobile phone.

型号名称标准/Standard of model name:

VG 0412

- 0412 → 尺寸规格/SIZE SPEC： 宽度/ Width ： 4mm, 长度/ length： 12mm
- VG → Linear vibration Motor

2.使用条件/Standard Operating Condition

NO.	项目/Item	规格/Specifications
2-1	额定电压 Rated voltage	1.8Vrms AC, Sine wave
2-2	使用电压范围 Operating voltage range	0.1～1.85Vrms AC
2-3	振动方向 Direction of vibration	Z axis
2-4	额定工作频率 Rated operating Frequency	240Hz
2-5	使用温度范围 Operating temperature range	-20℃~+60℃,Ordinary Humidity:65±20%RH
2-6	保存环境范围 Storage temperature range	-30℃~+70℃,Ordinary Humidity:65±20%RH

3.标准的测试条件/ Standard Testing Condition

NO.	项目/Item	规格/Specifications
3-1	温度 Temperature	25℃±3
3-2	湿度 Humidity	45% ~85%RH
3-3	电源电压 Power Supply, Voltage Source	1.8±0.05Vrms AC, Sine wave
3-4	工作频率 Operational Frequency	240 ±10Hz

4.特性/Electrical Characteristic

NO.	项目/Item	规格/SPEC.	条件/Condition
4-1	额定电流/ Rated Current	MAX.60mArms	Standard Testing condition
4-2	F0 点的振动量/ Acceleration	1.6Grms Min	Standard Testing condition， 100g dummy JIG
4-3	阻抗/ Resistance	29±10%Ω	Standard Testing condition
4-4	频率特性/ Frequency Characteristics	240 ±10 HZ	Standard Testing condition
4-5	上升时间/ Rise Time	Max 40msec	Standard Testing condition 0-50% normal Acceleration
4-6	下降时间/ Flling Time	Max 60msec	Standard Testing condition 100%-50% normal Acceleration
4-7	重量/ Weight	1.1±0.1 gram	Standard Testing condition
4-8	马达声音/ Mechanical Noise	Max.45dB(A) Refer To Figure 2 (参考图形 1)	10cm distance from microphone, Standard Testing condition
4-9	绝缘电阻/ Insulation Resistance	Min.10 MΩ	100V DC input, between Case and Lead Wire or PCB

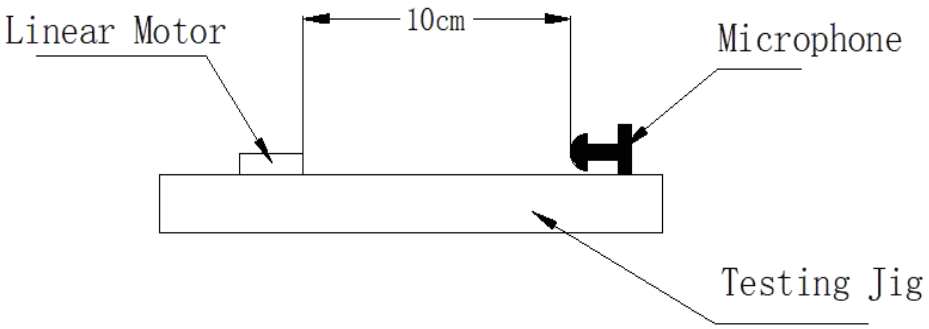

1. 马达被固定 / Motor:be fixed
2. 背景噪音：28dB MAX.
Back ground noise:28dB MAX.
3. 拾音器沿轴向正对电机平面
Microphone faces the plane of motor along the shaft

Figure 1：Noise measurement condition

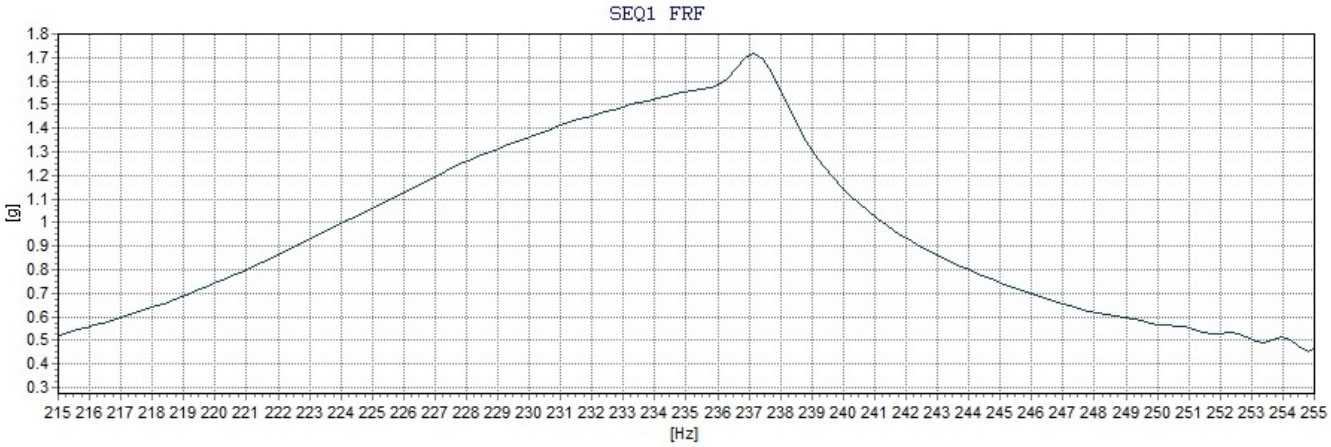

Frequency VS. Acceleration Characteristics

5.可靠性试验/Reliability Test

NO	项目/Item	条件/Condition
5-1	低温贮存试验 Low temperature Storage test	在-30℃的环境下放置168小时，然后在常温常湿下恢复4小时后测试。 Exposed at -30℃ for 168hours, then reurn to normal temperature and humidity for 4 hours before test.
5-2	高温贮存试验 High temperature Storage test	在+70℃的环境下放置168小时，然后在常温常湿下恢复4小时后测试。 Exposed at +70℃ for 168hours, then return to normal temperature and humidity for 4 hours before test.
5-3	高湿贮存试验 High humidity Storage test	在+55℃,95%RH的环境下放置120小时，然后在常温常湿下恢复4h后测试。 Exposed at +55℃ 95%RH for 120hours, then return to normal temperature and humidity for 4 hours before test.
5-4	温冲试验 Thermal shock test	马达按照以下试验条件放置 15 个周期，然后在常温常湿下放置 4 小时后测试。 Confirmed to operating of motor during 15 cycles as following test condition, then return to normal temperature and humidity for 4 hours before test. 试验条件/Test condition: 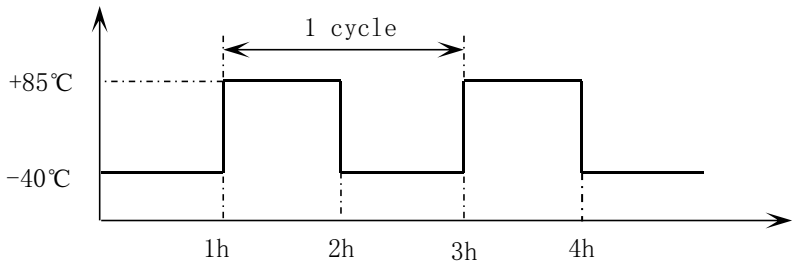 高低温转换时间：≤5分钟 Transfer time between high temperature and low temperature:≤5min
5-5	跌落 Drop test	将马达固定在30g的塑料夹具上，从1.5米的高度跌落到水泥地面上，六个面的每个面都跌落3次。 The motor that is attached to a 30g jig (plastic housing) and drop it onto the concrete floor from 1.5m height. Drop thrice in each of the six planes.

5-6	振动试验 Vibration test	将马达固定在150g的塑料夹具上，按以下要求进行试验： 1)扫频范围:10-55Hz 2)全振幅:1.5mm 3)扫频变化：10-55-10 约10分钟 4)振动方向:三个垂直方向 5)持续时间:每个方向10分钟（共30分钟） The motor that is attached to a 150g jig (plastic housing) and test according following condition: 1)Vibration frequency range: 10~55Hz 2)Total amplitude: 1.5mm 3)Sweep ratio: 10~55~10Hz approximate 10min 4)Direction of vibration: Three perpendicular directions 5)Duration: 10min (30min in total)
5-7	寿命试验 Life test	1.试验循环/Test cycle:300,000 cycle (cycle:1sec on/2sec off) 2.测试设备/Test equipment:寿命试验机/ Life time test machine 3.输入电压（1.8VrmsAC,Sine wave）,输入频率：240Hz Input Source 240Hz,1.8Vrms AC, Sine wave

► 判定标准/Judgment standard

试验后，测试数据必须符合以下规格：

1.加速度、电阻、电流变化率：不得超过初始值的±30%
2.噪音：55dB Max
3.外形，结构方面无异常发生

After test, following specifications must be satisfied

1.The fluctuation of Acceleration, Resistance, Rated Current: initial Value±30%
2.Noise:55dB Max
3.There should be no abnormalities to happen in structure

6.注意事项/Caution

(1)该马达是微型精密产品，在运输过程或使用时不要承受超过0.5 kgf的力，否则会引起外形或性能的变化.

As this motor is small and precise, do not press it over 0.5kgf force or while transportation or operation, it can cause the transformation of performance or external appearance.

(2) 请注意马达不要浸入到液体性物质中（比如：水，酒精等）

Please be careful, not to be drop into fluid substances (such as: water, alcohol etc.)

(3) 不要将马达长时间放置在高温或高湿下，否则有可能导致电机的性能下降。

Do not expose the motor to high temperature or high humidity for a long periods of time, it may cause a decline in performance.

(4) 马达不要靠近腐蚀性气体如H_2S、SO_2、NO_2等,否则会引起腐蚀。

Do not use near Corrosive gases(such as:H_2S、SO_2、NO_2 etc.), while cause erosion

(5) 请不要在靠近磁铁或带有磁场的仪器旁边使用或存放马达，否则有可能导致电机的性能下降。

Please do not operate or store the motor adjacent to magnet or apparatus that has a magnetic field, it may cause a decline in performance.

(6)为优化振动量,额定电压和频率可根据客户装配条件进行更改。

To optimize the vibration force, rated voltage and frequency could be changed as to customer assemble condition.

(7)马达符合有关环境的法律和法规的要求（如ROHS2.0、REACH、H/F等）

The motor complies with relevant environmental laws and regulations (such as: ROHS2.0, REACH, H/F etc.)

7.环保要求/Environmental protection Requirements

本产品所有零部件符合欧盟RoHS指令（2011/65/EU,(EU)2015/863）/无卤/REACH指令要求，具体环境有害物质管控限制如下/

This product conforms to the EU ROHS（2011/65/EU,(EU)2015/863），Halogen-Free and REACH certification,Specific contentas follows:

铅及其化合物最大允许含量为1000ppm/Lead and Lead compounds≤1000ppm

镉及其化合物最大允许含量为100ppm/Cadmium and cadmium compounds≤100ppm

汞及其化合物最大允许含量为1000ppm/Mercury and Mercury compounds≤1000ppm

六价铬化物最大允许含量为1000ppm/Hexavalent chromium compounds≤1000ppm

多溴联苯(PBB)最大允许含量为1000ppm/Polybrominated biphenylethers≤1000ppm

多溴联苯醚(PBDE)最大允许含量为1000ppm/Polybrominated diphenylethers≤1000ppm

领苯二甲酸二异丁酯（DIBP）最大允许含量为1000ppm /DIBP≤1000ppm

邻苯二甲酸二丁酯(DBP)最大允许含量为1000ppm /DBP≤1000ppm

邻苯二甲酸苄基酯(BBP)最大允许含量为1000ppm/BBP≤1000ppm

邻苯二甲酸二（2-乙基己基）酯(DEHP)最大允许含量为1000ppm/DEHP≤1000ppm

六溴环十二烷(HBCDD)最大允许含量为1000ppm/HBCDD≤1000ppm

溴Br最大允许含量为900ppm/Br≤900ppm

氯Cl最大允许含量为900ppm/Cl≤900ppm

溴加氯之和最大允许含量为1500ppm/Br+Cl≤1500ppm

REACH 指令按最新法规内容管控执行/The instructions are subject to the latest regulations

包装材料环保管控要求/Environmental control requirements for packaging materials：

Pb+Cd+Hg+Cr6 < 100ppm (其中, Cd<50ppm)

8.外形图/Vibration Outside View

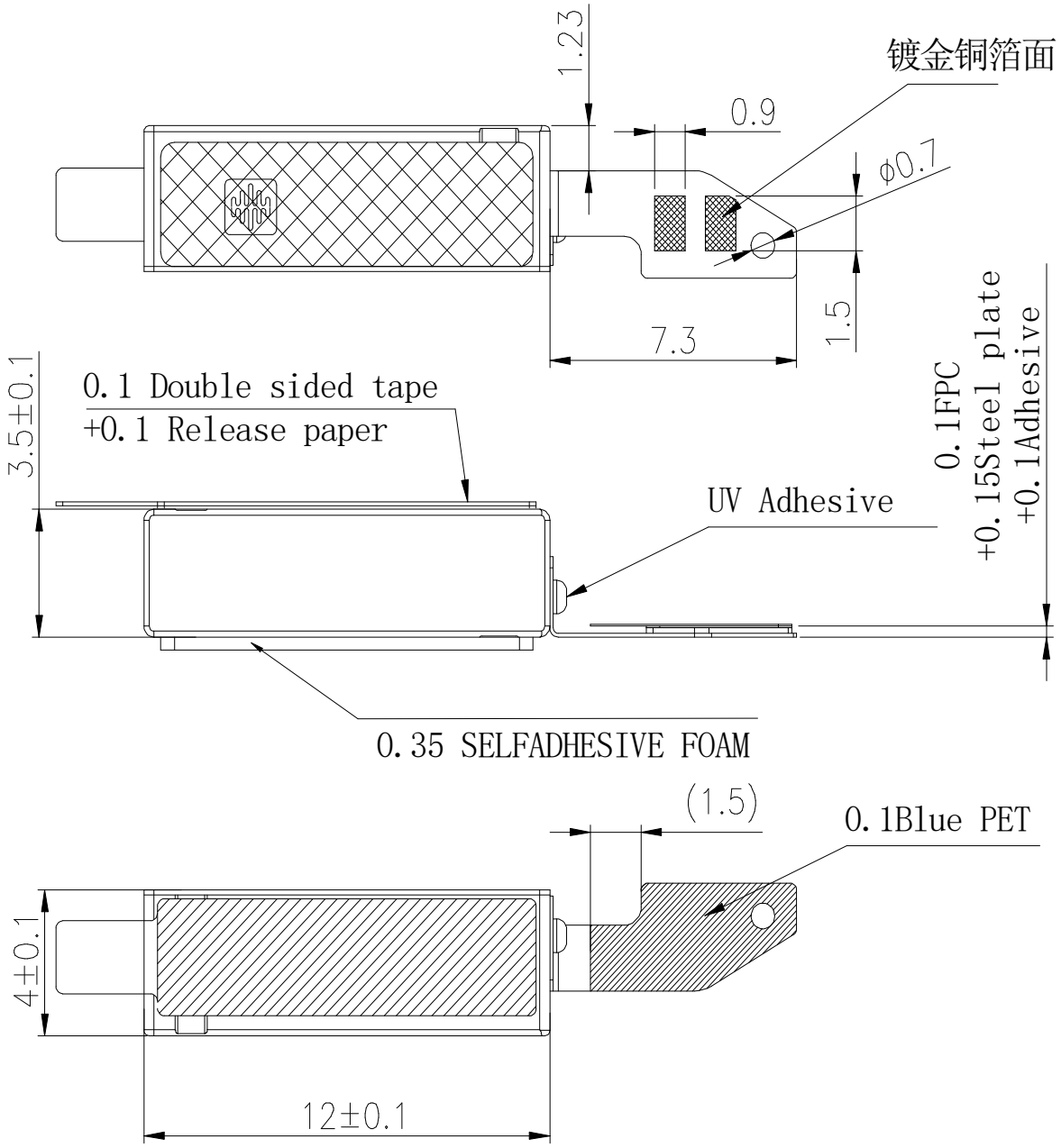

9.包装/Packaging

吸塑盒尺寸(长:250mm 宽:210m 高:11mm)
Tray dimension
(L:250mm W:210mm H:11mm)
每个吸塑盒放 100 只
100 Pcs per tray

内箱尺寸(260mm 宽:215mm 高:80mm)
Inner-box dimension (L:260mm W:215mm H:80mm)
每 11 个吸塑盒捆在一起,数量为 1000 只，装入内箱
Put into inner-box 11 tray together with tape 1000 Pcs per 11 tray .

4 个内箱装入外箱，数量共 4000 只；
Put 4 inner-box into outer-box, total 4000 Pcs.
外箱尺寸: (440mm 宽:265mm 高:168mm)
Outer-box dimension:
(L:440mm W:265mm H:168mm)